D60 PK MV /2133 P/L

v.1

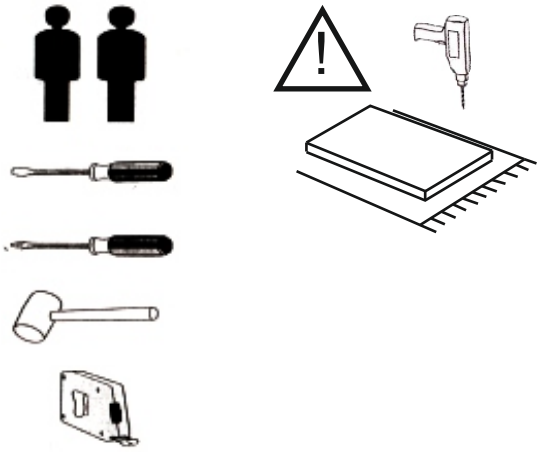

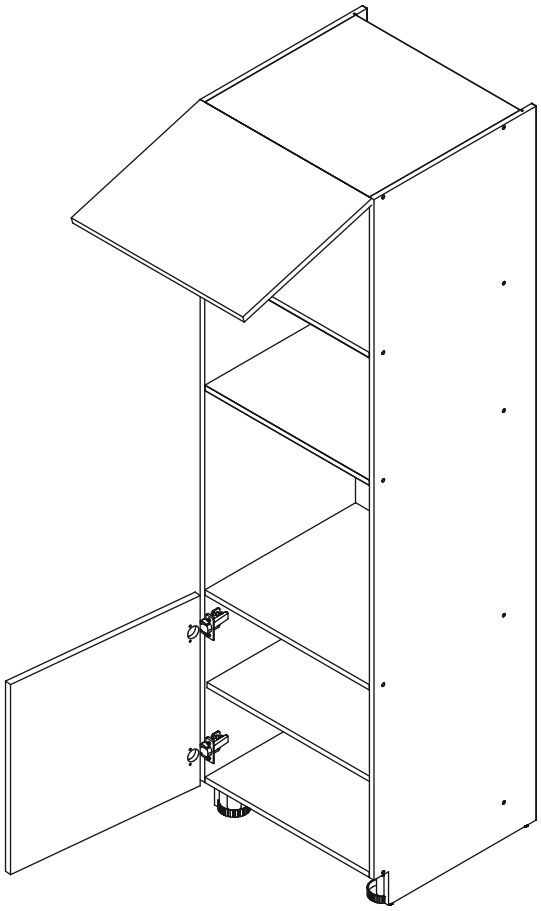

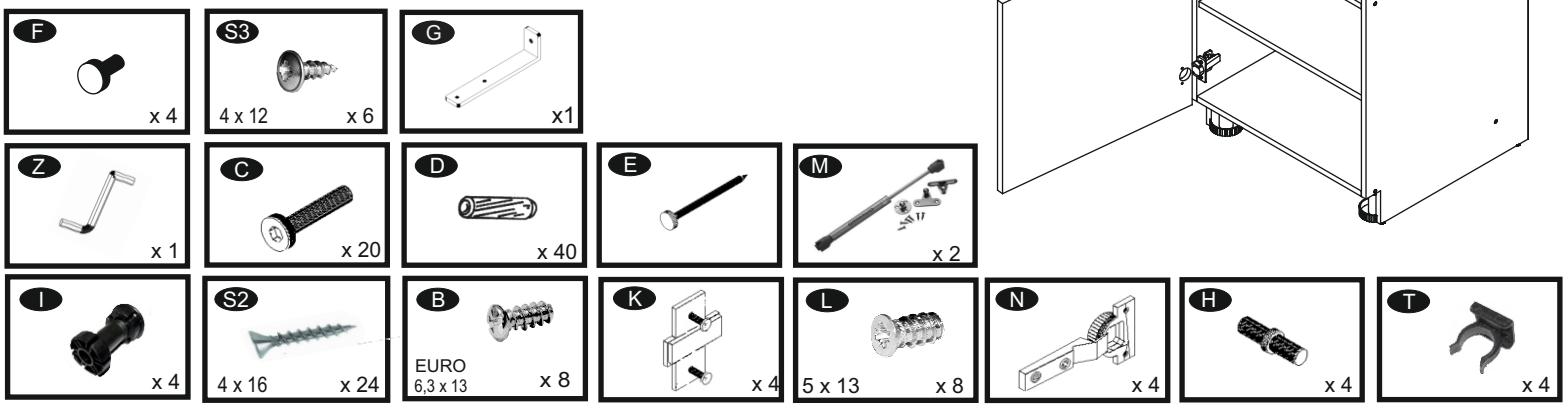

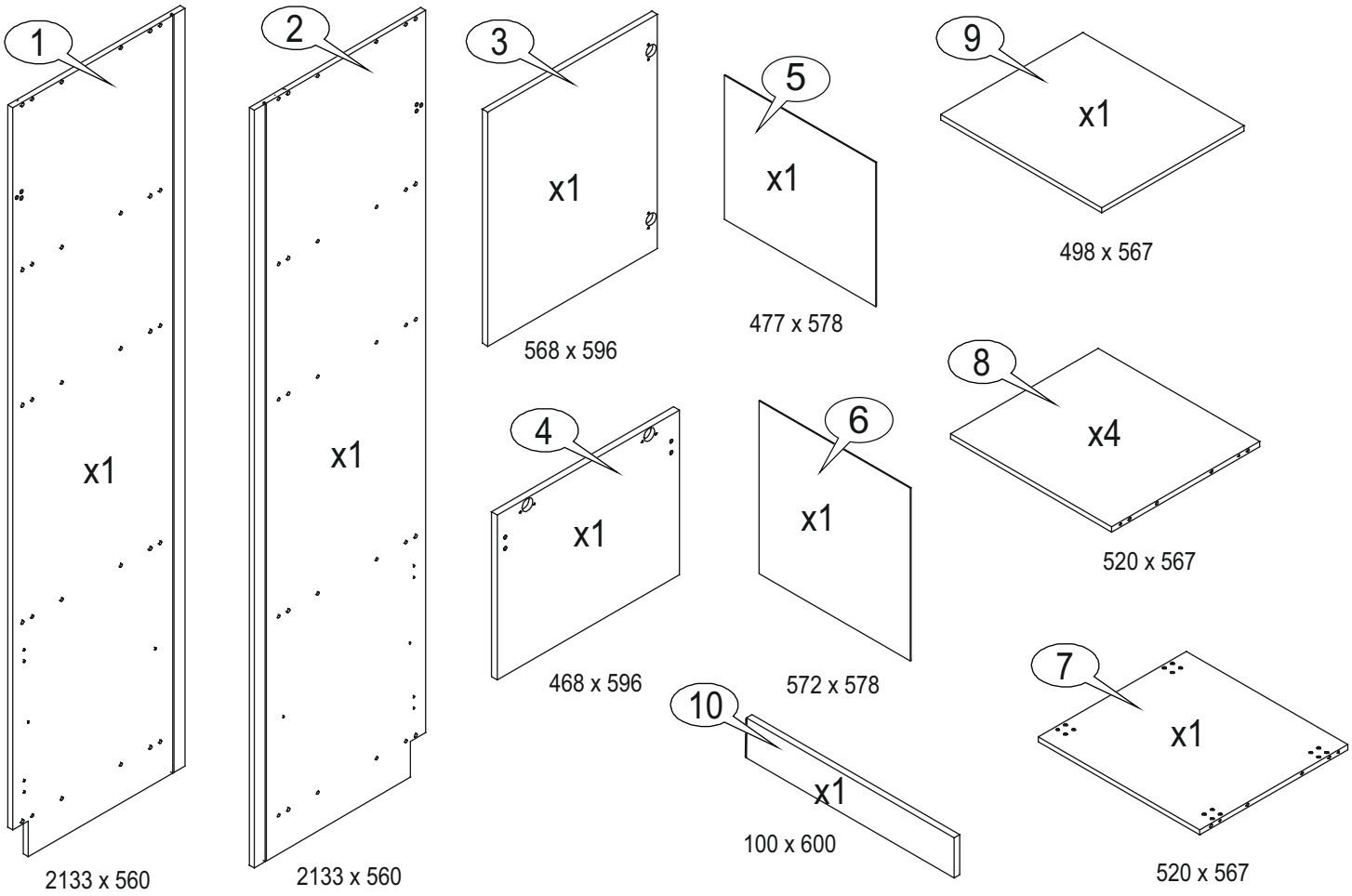

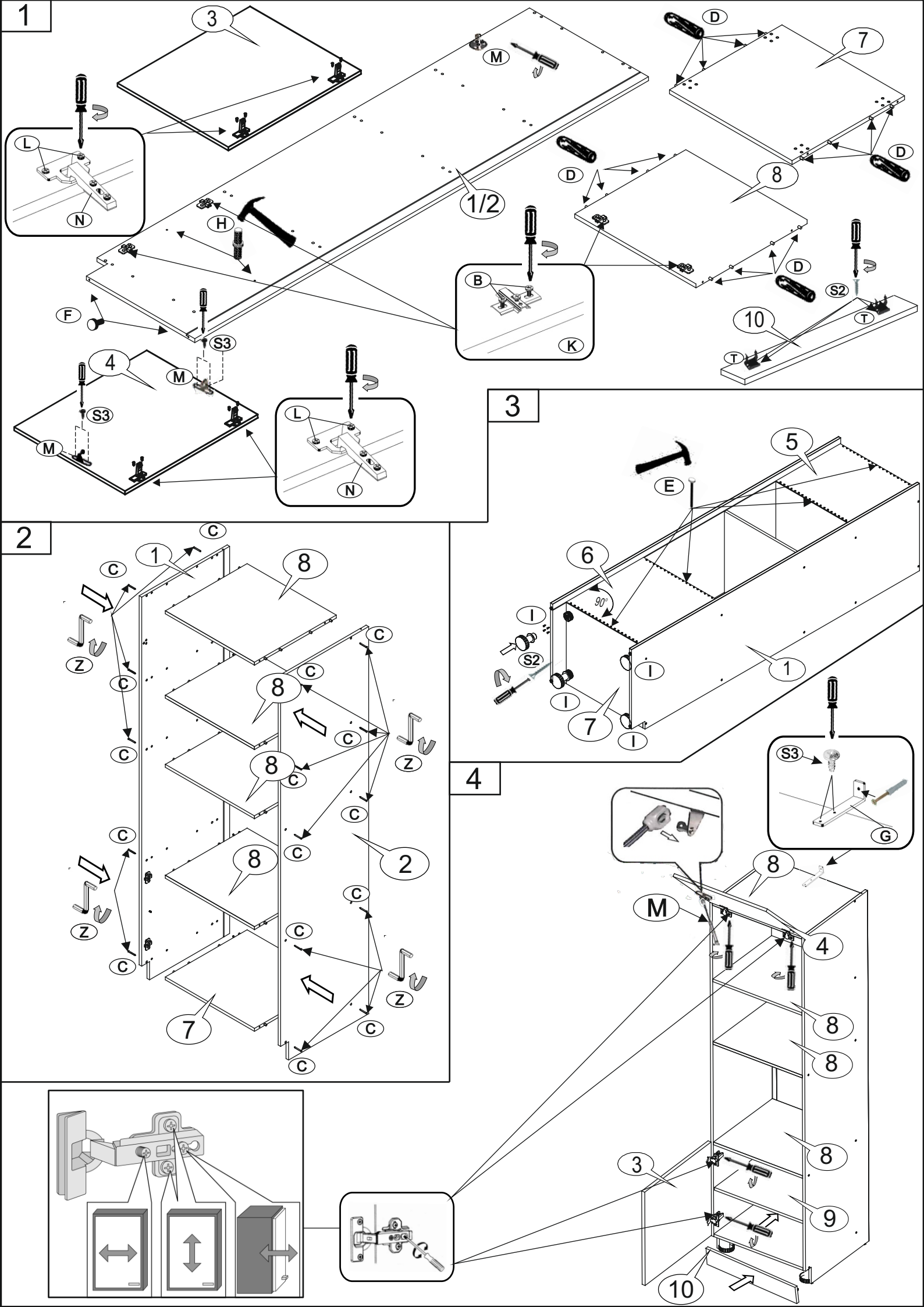
1
3
M
D
7
L
N
1/2
H
D
8
B
K
S2
T
10
F
S3
4
M
S3
M
L
N
3
5
E
6
90°
I
S2
I
I
7
I
1
2
C
1
8
Z
8
8
2
8
7
4
S3
G
8
M
4
8
8
8
3
9
10